# Domino square

Atomis B.V.
Jadelaan 33
2132 XX Hoofddorp
The Netherlands

**T** + 31 (0)23 554 09 20
**F** + 31 (0)23 554 09 20
**E** info@atomis.nl
**W** www.atomis.nl

Recessed multiple luminaires with decorative bezel painted silvergrey. Each luminaire has 1, 2, 3 or 4 units for CFL, QR-111 or CDM-R111 / HCI-R111 lamps.

### Downlight units CFL

Combines high effeciency with low-glare thanks to:

- ▷ **superior reflector material**
- ▷ **multi-focus reflector technology**
- ▷ **aluminium reflector functions as heat-sink**

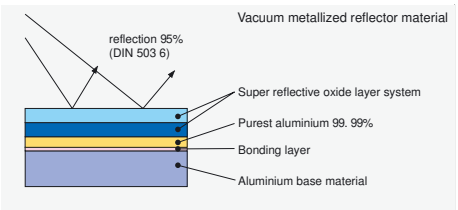


**Domino square 1x CFL, E26 / E27, HCI-E/P**

| code | W | lamp | base | type | lm |
|---|---|---|---|---|---|
| **07.110** | 1x26/32W | TC-T/E | GX24q-3 | HF | 1800/2400 |
| **07.113*** | 1x35W | HCI-E/P | E26/E27 | HF | 2850 |
| **07.115*** | 1x70W | HCI-E/P | E26/E27 | HF | 6400 |
| **07.090** | (max.)100W | E26/E27 | E26/E27 | | |
| | * Recommended to be used with coated lamps | | | | |

Resulting in a LOR of 75% for CFL lamps and 82% for HCI-E/P lamps, an UGR rating of <19 and a visual cut-off from the horizontal axis of 35°.

### Spot units

The 12V50W QR-111 halogen and the 35-70W CDM-R111 / HCI-R111 lamps are powered by remote transformer or HF gear. Easy lamp replacement from the front. Units are fully directional with a tilt of 45°.

Design: Philip Feenstra, 2006

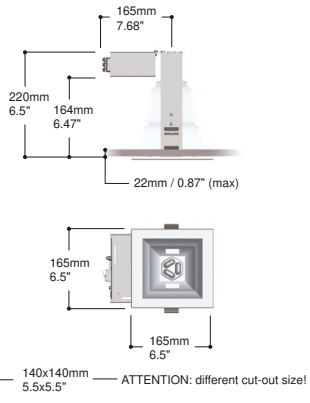


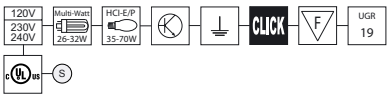


| | |
|---|---|
| **50.571** | Spring for ceiling thickness 22-45mm ( set of 2 pcs ) |

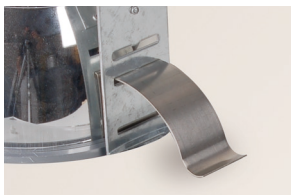

- ▷ **multi-focus low glare reflector (visual cut-off 35°)**
- ▷ **vacuum metallized high efficiency reflector (light output ratio 75-82%)**
- ▷ **including electronic gear**